P-LOK 快速指南

圆头螺丝（M6-14 X 4）　　多功能L型固定架 X 1

P-LOK安装Q1S序列挡

序列挡底板

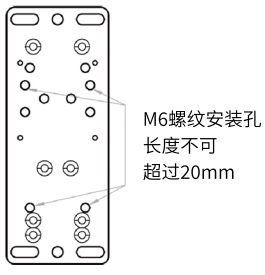

安装方式①

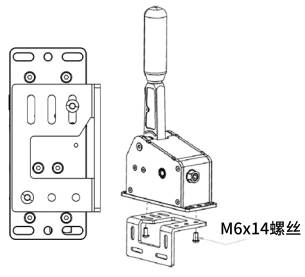

安装方式②

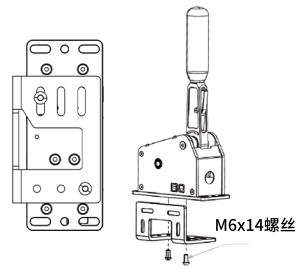

P-LOK安装TB-1手刹

手刹底板

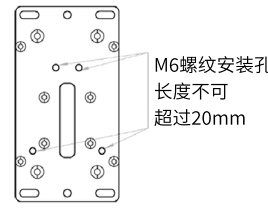

安装方式①

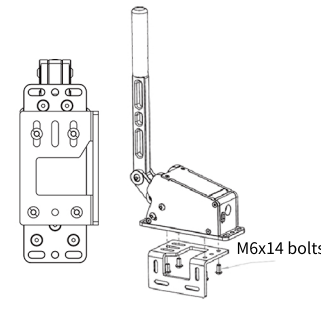

安装方式②

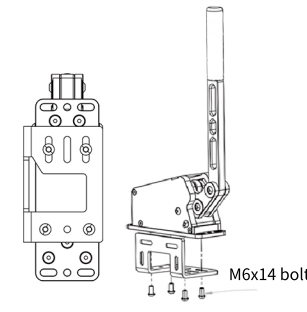

P-LOK安装Q1序列挡

序列挡底板

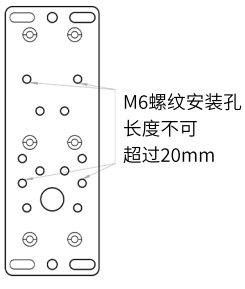

安装方式①

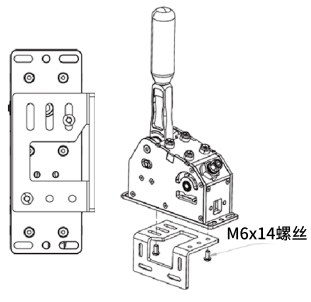

安装方式②

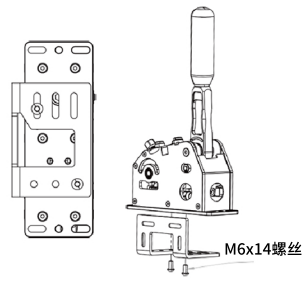

P-LOK安装DS-8X排挡

排挡底板

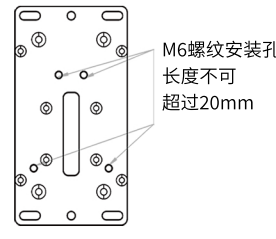

安装方式①

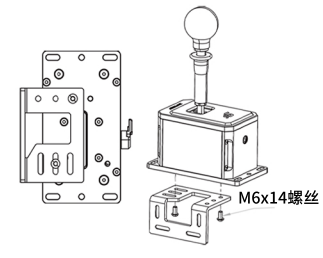

安装方式②

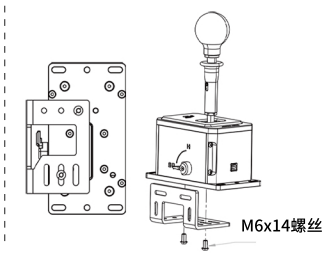

P-LOK Quick Guide

Button Head Socket Cap Screw(M6-14 X 4)　　Multifunctional L Shaped Bracket X 1

Install the P-LOK on a Sequential Shifter Q1S

Base plate of
the sequential shifter

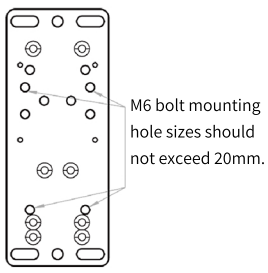

Mounting Method①

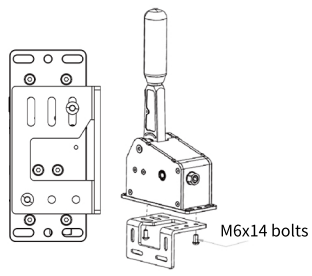

Mounting Method②

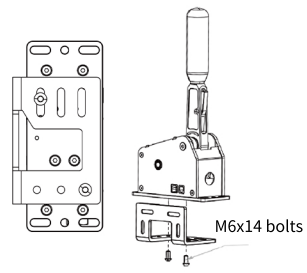

Install the P-LOK on a TB-1 Handbrake

Base plate of
the handbrake

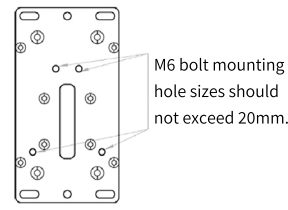

Mounting Method①

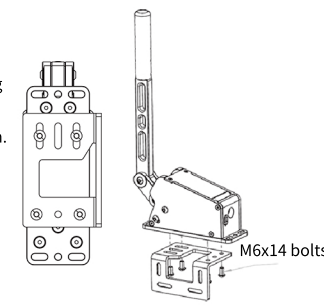

Mounting Method②

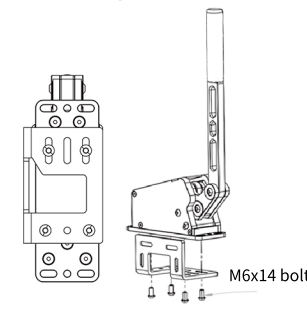

Install the P-LOK on a Sequential Shifter Q1

Base plate of
the sequential shifter

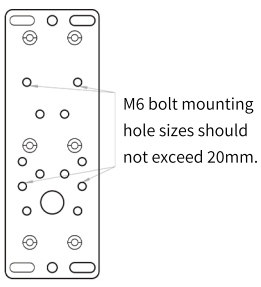

Mounting Method①

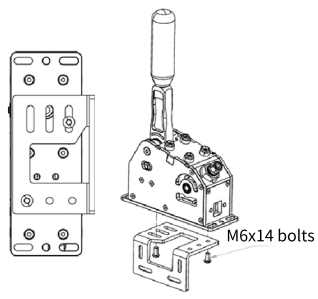

Mounting Method②

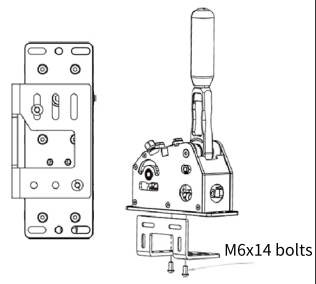

Install the P-LOK on a DS-8X Shifts

Base plate of
the Shifts

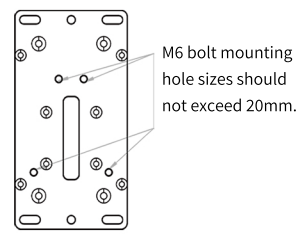

Mounting Method①

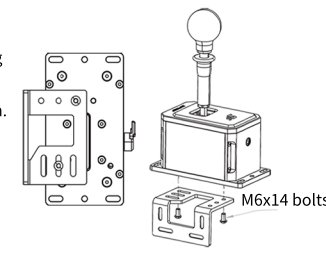
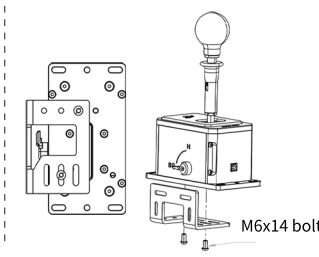
Mounting Method②